BALDOR
MOTION PRODUCTS

POWERED BY Mint

MicroFlex

Brushless AC Servo Drive

- AC Servo Drive—3, 6 or 9 amps versions
- Direct 115—230 VAC single phase or 3 phase
- High performance control of brush less AC servomotors
- Encoder and 18-bit SSI feedback—software selectable
- Optional Resolver feedback
- RS232 or RS485 commissioning port
- Intuitive wizard software—set-up in minutes!

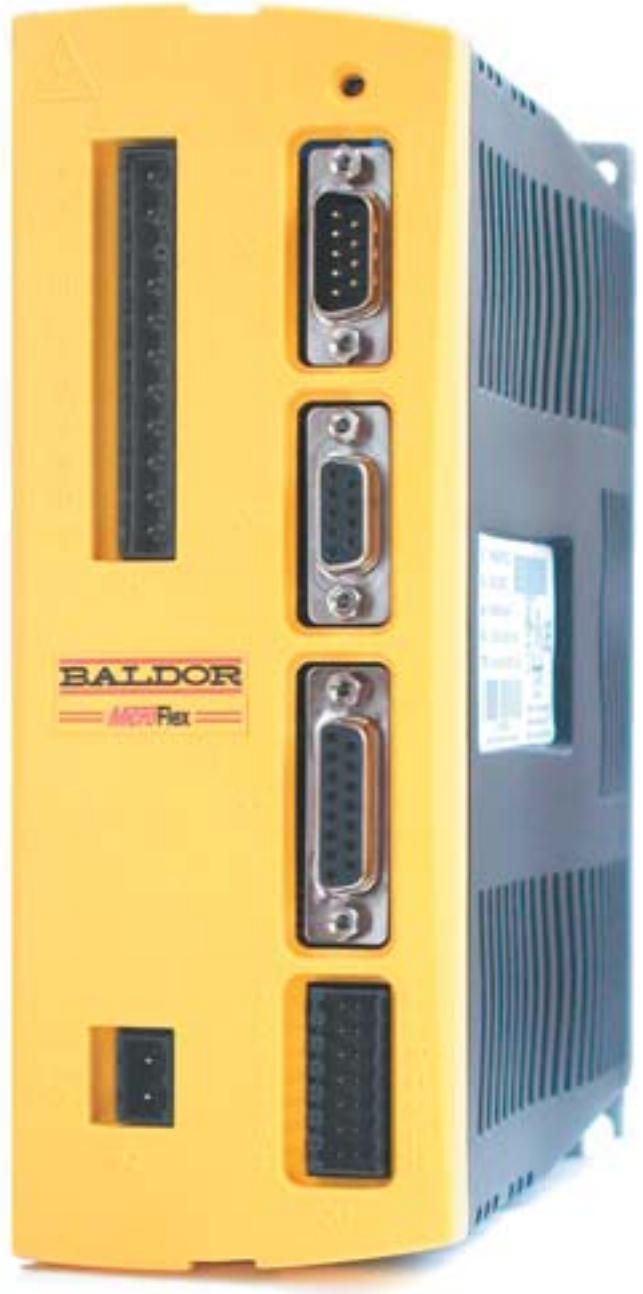

The new MicroFlex digital servo drive from Baldor marks a new step in the evolution of cost effective system design, without sacrificing performance. The 'state of the art' construction houses a totally digital DSP solution to brushless AC servo control, both rotary and linear motors. MicroFlex is ideally matched to Baldor's range of brushless high performance rotary servomotors and linear motors.

MicroFlex provides a simple industry standard analog command interface. Along with its encoder output, MicroFlex easily interfaces to motion controllers and PLCs alike. An additional 5V step and direction interface makes MicroFlex an ideal package for stepper drive replacement in both new and retrofit applications.

Available in three power ratings of 3, 6 and 9A, MicroFlex will run from single or three phase supplies from 115 to 230VAC. This makes it possible to fit one standard motion control system into machinery for international markets.

MicroFlex—Power and Flexibility

MicroFlex is a totally digital control, using a a high performance Digital Signal Processor (DSP). A 16KHz Space Vector Modulation (SVM) and 62.5µS current loop update, ensure optimal current regulation and dynamic performance for today's demanding applications.

By controlling the IGBT power devices using SVM instead of the more usual carrier based pulse width modulation (PWM), users can run servo motors at typically 15% higher speeds with reduced switching losses and harmonics. In today's world of increased productivity, this can translate directly into greater machine throughput.

The industry standard analog command input can be configured for either a torque or velocity reference. Alternatively, an integrated TTL Step and Direction interface makes MicroFlex the ideal package for stepper drive upgrade in both new and retrofit applications. This can even be used to expand the number of servo axes when used with Baldor's NextMove controllers and their stepper interfaces.

Housed in a compact package, MicroFlex is available in 3, 6 and 9A versions (with 200% overload). All current ratings share the same dimensions, making panel design simple for different application demands. Voltage operation is from 115 through 230VAC single or three phase, making MicroFlex ideal for international markets.

To ensure reliability, MicroFlex protects against: over speed; over voltage; over current; feedback loss and motor I^2t.

Set-up and diagnostics is performed by a Windows front end, Mint WorkBench. This same tool is used across Baldor's range of motion controllers and intelligent servo drives. Set-up is performed from a simple wizard driven front end. Baldor motors are selected from a 'drop-down'. For third party motors, the front end can calculate key parameters such as motor inductance, resistance and inertia. Only the simplest of data needs to be entered keeping set-up time to a minimum. The auto-tune process will even detect incorrect wiring of the motor and feedback, and electronically correct for this incorrect wiring.

Power Supply Requirements

MicroFlex operates from a single or three phase supply, 115 to 230VAC. The control electronics are maintained by an external customer supplied 24V DC supply, in the event of main AC power removal, for typical safety schemes. This also maintains the simulated encoder output which can be used by an external device, such as a motion controller or PLC, to maintain position during an emergency stop situation.

SSI 7-wire digital interface for optimum performance and ease of use.

SSI – Synchronous Serial Encoders

MicroFlex sports a fully digital feedback interface, supporting encoders and SSI encoders. For the highest resolution, SSI offers up to 18-bit, or 262,144 counts per revolution via a totally digital 7 wire interface. No analog signals to degrade performance. This is ideal for applications requiring optimum speed regulation (low ripple) high system stiffness and of course high positional resolution.

For added reliability, MicroFlex is able to regulate the voltage to the encoder, taking into account voltage drops across longer cable lengths.

Matched Performance

MicroFlex is ideally matched to Baldor's range of Brushless Servo Motors (BSM Range) and servo linear motors to provide high performance at the right price.

Baldor servo motors use the latest in magnet technology, Neodymium Iron Boron to offer the highest torque in the smallest package. Available in heavy inertia (BSM-C series) and light inertia (BSM N-Series), the range extends from 0.45Nm to 40Nm (3.9 to 354 lb-in). C-series motors are available in IEC frame sizes 80 and 90, while the N-Series are available in sizes 50, 63, 80, 90 and 100. NEMA mountings are also available.

BSM motors are available with 2500 line commutating encoders for high performance applications, or alternatively, a fully digital SSI encoder, offering the highest resolution of 18-bits (262,144 counts per revolution).

MicroFlex has been designed from the outset to offer the highest performance with Baldor's range of cog free linear motors. Available in 'kit' form, stages or even complete XYZ gantry stages, Baldor's linear motors provide the highest performance and accuracy for any linear actuation applications.

In addition, Baldors ground breaking HyCore linear motors can also be controlled with optimal performance, to provide a linear cost effective solution, with performance and accuracy benefits.

Accessories

A complete range of accessories are available for MicroFlex to ease system integration. These include motor power and feedback cables, EMC filters and regeneration resistors. Please refer to the current price list for order codes.

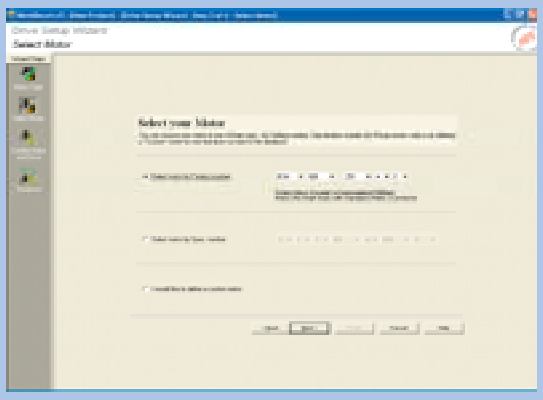

Set-up in minutes!

A step by step software wizard makes set-up a simple task, removing the complexity traditionally associated with servo drives and allowing set-up to be complete in a matter of minutes. Simply select the motor from the drop down list and follow the onscreen instructions.

Auto tuning simplifies the task even more, checking for motor feedback operation, measuring electrical characteristics of the motor, feedback alignment, hall sensor operation, load measurement and of course resulting gain term adaptation. In addition a simple percentage style control allows you to eliminate overshoots without sacrificing system stiffness. Simply tune the system to be as responsive (often referred to as 'stiffness' or 'bandwidth') as you like to the load using the 'Auto Tune' system and then adapt for any overshoot resulting from fast changes in speed or current command.

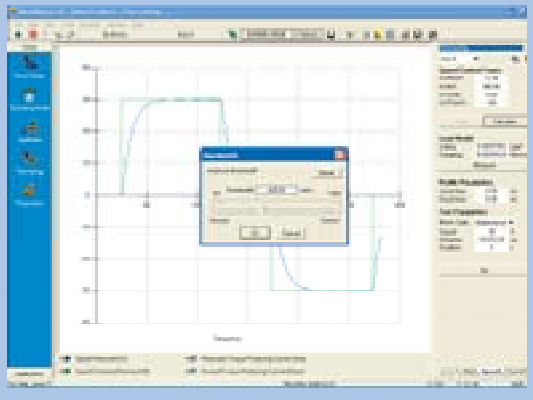

Technical Data

		FMH2A03TR-EN23	FMH2A06TR-EN23	FMH2A09TR-EN23
Power	Min/Max AC Supply	1 or 3 phase 105—230VAC 50/60Hz		
	Nominal DC Bus Supply	160-325VDC	160-325VDC	160-325VDC
	Cont./Peak Current (0.5 secs)	3/6	6/12*	9/18*
Digital Inputs		Two Inputs: Enable, Reset (software configurable) - Opto-isolated (10-30VDC)		
Digital Outputs		One Output: Drive OK—opto-isolated		
Analog Command Input		±10V with 12 bit ADC resolution. Programmable for torque or velocity command		
Step and Direction Input		Single ended 5V TTL. 400kHz max. frequency		
Feedback		Digital interface programmable for: - Incremental encoder with encoder loss detection. Max. frequency 10 MHz - Commutating incremental encoder. Max. frequency 10 MHz - 18-bit SSI with 7 wire interface - Hall sensor (no encoder) for trapezoidal commutation Optional resolver feedback interface		
Encoder Output		Simulated encoder output for connection to external motion controller		
Commutation		Sinusoidal commutation with encoder or SSI Trapezoidal commutation with Hall sensors only		
Modes of Operation		Torque control, velocity control or step and direction		
Communications		RS232 or RS485 for commissioning and diagnostics		
Protection		DC bus over voltage monitoring; DC bus under voltage monitoring; Peak over-current; Motor short circuit; Over temperature; I^2T over current		
Regenerative Capability		Regenerative braking IGBT—requires external regen resistor		
Control Supply Input		24VDC nominal (20-30VDC) @ 2A external - customer supplied		
Connectors		D-type for serial port and feedback. Two part screw terminals for motor and power		
Indicators		Single LED indicator for drive status		
Dimensions		H: 180 mm (7.09 in) W: 79.6 mm (3.13 in) L: 157 mm (6.18 in)		
Weight		1.5 Kg (3.3 lbs.)		
Operating Temperature		0°C to 45°C (32°F to 113°F) ambient		

* External ventilation required. Order fan kit FAN001-24

Ordering Information:

Catalog Number	Description
FMH2A03TR-EN23	3A 115-230VAC MicroFlex. RS232. Encoder
FMH2A06TR-EN23	6A 115-230VAC MicroFlex. RS232. Encoder
FMH2A09TR-EN23	9A 115-230VAC MicroFlex. RS232. Encoder
FMH2A03TR-RN23	3A 115-230VAC MicroFlex. RS232. Resolver.
FMH2A06TR-RN23	3A 115-230VAC MicroFlex. RS232. Resolver.
FMH2A09TR-RN23	3A 115-230VAC MicroFlex. RS232. Resolver
FAN001-24	Fan tray to provide forced air cooling

1) For RS485 feedback option, substitute the last 2 for a 4. For example, FMH2A03TR-EN**2**3 becomes FMH2A03TR-EN**4**3.

2) Add /12 for the bulk option of 12 units.

3) Please visit the baldor website or contact your local Baldor representative for a full range of cable assemblies, EMC filters and regenerative resistor that accompany MicroFlex.

Dimensions (mm [inches])

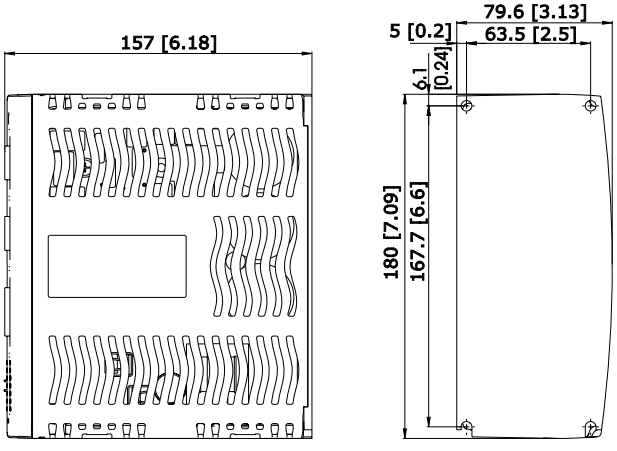

World Headquarters (U.S.A.):
Baldor Electric Company
Tel: +1 479 646-4711
Fax: +1 479 648-5792
E-mail: sales.us@baldor.com

Australia:
Tel: +61 2 9674 5455
Fax: +61 2 9674 2495
E-mail: sales.au@baldor.com

China
Phone: +86-21-64473060
Fax: +86-21-64078620
E-mail: sales.cn@baldor.com

Germany:
Tel: +49 (0) 89 905 08-0
Fax: +49 (0) 89 905 08-490
E-mail: sales.de@baldor.com

Japan:
Tel: +81 45-412-4506
Fax: +81 45-412-4507
E-mail: sales.jp@baldor.com

Korea:
Tel: +(82-32) 508 3252
Fax: +(82-32) 508 3253
E-Mail: sales.kr@baldor.com

Mexico:
Tel: +52 477 761 2030
Fax: +52-477 761 2010
E-mail: sales.mx@baldor.com

Singapore:
Tel: +65 744 2572
Fax: +65 747 1708
E-mail: sales.sg@baldor.com

Switzerland:
Tel: +41 52 647 4700
Fax: +41 52 659 2394
E-mail: sales.ch@baldor.com

United Kingdom:
Tel: +44 (0) 1454 850000
Fax: +44 (0) 1454 859001
E-mail: sales.uk@baldor.com

For additional office locations visit www.baldor.com

Local Distributors

FL1925
02/05 - UK
12,000